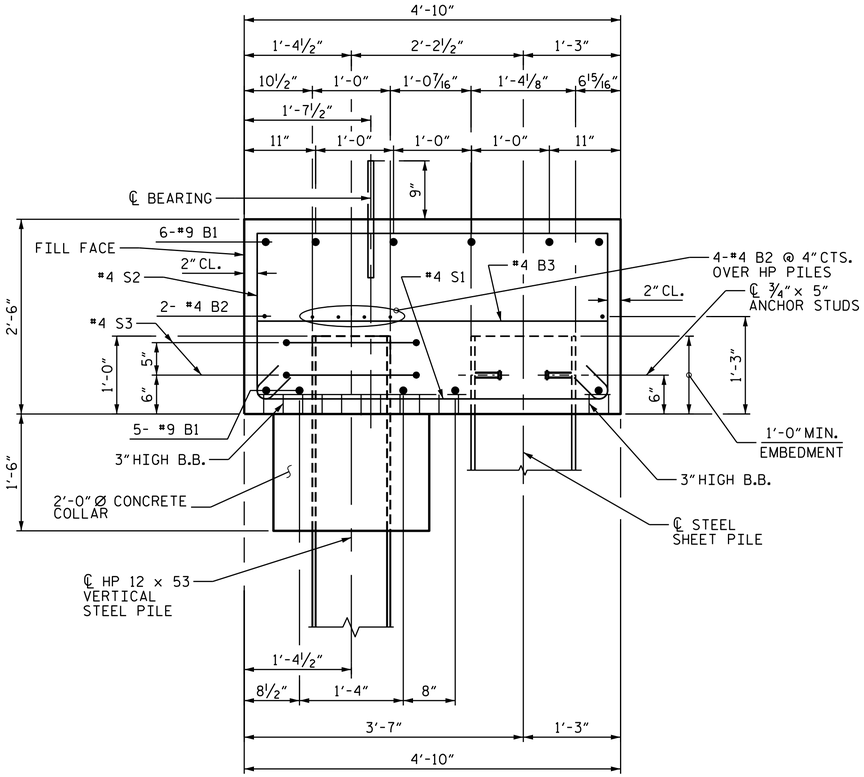

SECTION A-A THRU CAP

DRILL OR BURN 2" Ø MAX. HOLE IN STEEL SHEET PILES FOR #4 S1 BARS.

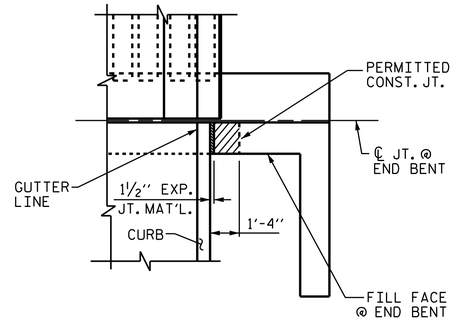

PLAN

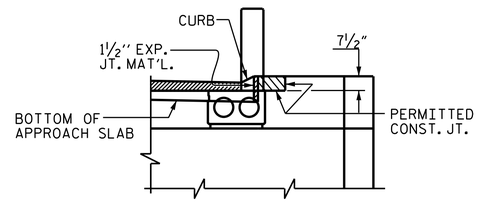

ELEVATION

BLOCKOUT IN WING WALL FOR CORED SLAB

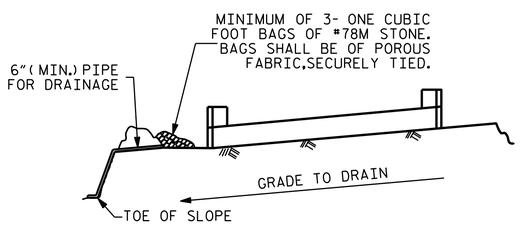

BAGGED STONE AND PIPE SHALL BE PLACED IMMEDIATELY AFTER COMPLETION OF END BENT EXCAVATION. PIPE MAY BE EITHER CONCRETE, CORRUGATED STEEL, CORRUGATED ALUMINUM ALLOY, OR CORRUGATED PLASTIC. PERFORATED PIPE WILL NOT BE ALLOWED.

BAGGED STONE SHALL REMAIN IN PLACE UNTIL THE ENGINEER DIRECTS THAT IT BE REMOVED. THE CONTRACTOR SHALL REMOVE AND DISPOSE OF SILT ACCUMULATIONS AT BAGGED STONE WHEN SO DIRECTED BY THE ENGINEER. BAGS SHALL BE REMOVED AND REPLACED WHENEVER THE ENGINEER DETERMINES THAT THEY HAVE DETERIORATED AND LOST THEIR EFFECTIVENESS.

NO SEPARATE PAYMENT WILL BE MADE FOR THIS WORK AND THE ENTIRE COST OF THIS WORK SHALL BE INCLUDED IN THE UNIT CONTRACT PRICE BID FOR THE SEVERAL PAY ITEMS.

TEMPORARY DRAINAGE AT END BENT

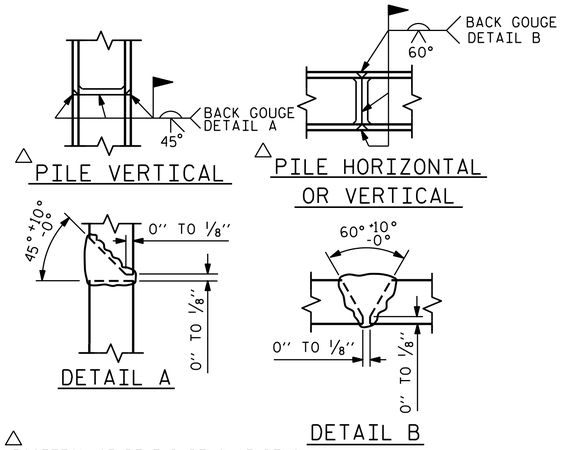

△ PILE VERTICAL

△ PILE HORIZONTAL OR VERTICAL

DETAIL A

DETAIL B

△ POSITION OF PILE DURING WELDING.

PILE SPLICE DETAILS

BAR TYPES

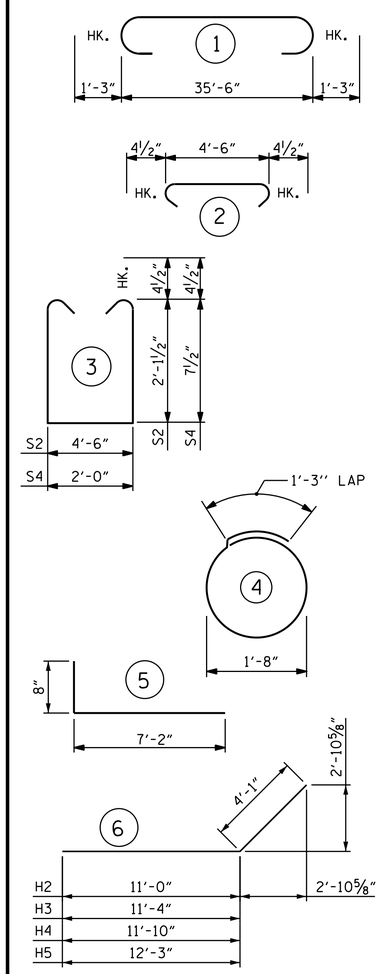

ALL BAR DIMENSIONS ARE OUT TO OUT.

END BENT #1
BILL OF MATERIAL

BAR	NO	SIZE	TYPE	LENGTH	WEIGHT
B1	11	9	1	38'-0"	1421
B2	12	4	STR	19'-1"	153
B3	9	4	STR	4'-6"	27
B4	8	4	STR	2'-0"	11
D1	20	6	STR	1'-6"	45
H1	24	4	5	7'-10"	126
H2	4	4	6	15'-1"	40
H3	2	4	6	15'-5"	21
H4	2	4	6	15'-11"	21
H5	4	4	6	16'-4"	44
K1	12	4	STR	2'-11"	23
S1	46	4	2	5'-3"	161
S2	46	4	3	9'-6"	292
S3	10	4	4	6'-6"	43
S4	22	4	3	4'-0"	59
V1	48	4	STR	4'-11"	158
REINFORCING STEEL LBS.					2,645

CLASS "A" CONCRETE BREAKDOWN	
POUR #1 CAP & LOWER WINGS & COLLARS	18.2 C.Y.
POUR #2 UPPER PART OF WINGS	2.0 C.Y.
POUR #3 COPING	2.1 C.Y.
TOTAL	22.3 C.Y.
HP 12 x 53 STEEL PILES	
No. = 5	LIN. FEET. 500
PILE REDRIVES	EA. 5
STEEL SHEET PILES	
NO. CONNECTOR = 2	
NO. PILES = 36	
TOTAL NO. = 38	SQ. FT. 3511

PROJECT NO. BP17.1.R.68

CAMDEN COUNTY

STATION: 13+30.50 -L-

SHEET 5 OF 5

STATE OF NORTH CAROLINA
DEPARTMENT OF TRANSPORTATION
RALEIGH

SUBSTRUCTURE
END BENT #1

NORTH CAROLINA PROFESSIONAL SEAL 21271 ENGINEER GREGORY W. DICKEY

DocuSigned by: Greg Dickey 4/10/2015
884E46B8CE5B4B6...

REVISIONS								SHEET NO.
NO.	BY:	DATE:	NO.	BY:	DATE:			S-12
1			3					TOTAL SHEETS
2			4					18

DRAWN BY : N. Ruffin DATE : 3/19/15
CHECKED BY : K.P. SEDAI DATE : 4/1/15

09-APR-2015 11:26
S:\DPG1\Division1\17BP.1.R.68\Final Plans\DocuSign Setup\401_000_17BP.1.R.68_SMU_S-0.dgn
nruffin